卷册检索号 SEARCH NO. OF THE VOLUME
MLHVDC-LCS-ECI-DD-WF-0504 30-B003701S-S0504

图纸文件目录（首页）

CATALOG OF DRAWING DOCUMENTS (HEAD PAGE)

拉合尔±660kV换流站 工程 施工图 阶段
±660kV Lahore Converter Station PROJECT Detail Design DESIGN STAGE

消防 专业 第 05 卷 第 04 册
Fire Fighting SPECIALITY VOLUME BOOK

卷册 名称 换流变雨淋阀组安装图
Volume name Installation Drawing of Deluge Valve for Converter Transformers

批 准 APPROVED BY	
审 核 REVIEWED BY	
设计/勘测 DESIGNED BY/ SURVEYED BY	
图纸 5 张 DRAWING NOS.	打印件 本 PRINTED COPIES NOS.

序号 No.	图 号 DRAWING NO.	文件名称 DOCUMENT TITLE	版本 EDITION	张 NOS.	本 NOS.	备注 REMARKS
1	30-B003701S-S0504-001	换流变雨淋阀组安装图施工说明	A	1		
		Construction Introduction of Deluge Valve Box for Converter Transformers				
2	30-B003701S-S0504-002	站区水喷雾干管平面布置图	A	1		
		Layout Plan of Main Water Spray System Pipe for Converter Transformers				
3	30-B003701S-S0504-003	雨淋阀组平、剖面图	A	1		
		Plan and Section Drawing of Deluge Valve Box				
4	30-B003701S-S0504-004	雨淋阀组管道透视图	A	1		
		Perspective Drawing of the Pipe of Deluge Valve Box				
5	30-B003701S-S0504-005	雨淋阀组及水喷雾干管材料表	A	1		
		Material List of the Deluge Valve Box and Main Pipe of Water Spray System for Converter Transformer				

注：

说明：

Notes：

1. 本册图采用的主要设计验收规范

1. Design & Acceptance Standards and Codes:

1.1《火力发电厂与变电站设计防火规范》GB50229-2006

1.1《Code for design of fire protection for fossil fuel power plants and substations》GB50229-2006

1.2《消防给水及消火栓系统技术规范》GB50974-2014

1.2《Technical code for fire protection water supply and hydrant systems》GB50974-2014

1.3《建筑设计防火规范》GB50016-2014（2018版）

1.3《Code for fire protection design of buildings》GB50016-2014（2018）

1.4《水喷雾灭火系统技术规范》GB50219-2014

1.4《Code for design of water spray extinguishing system》GB50219-2014

1.5 国家建筑标准设计《给水排水标准图集》

1.5 National building standard design "standard collective drawings of water supply and drainage(SCDWSD)"

2. 主要设计概况

2. Design Overview

2.1 本册图的设计范围为换流变雨淋阀组安装及水喷雾干管布置图。消防水源自站区室外消防水管网引接，详见本工程30-B003701S-S0503卷册。

2.1 The design scope of this drawing volume is the deluge valve box and the main water spray system pipe for Converter Transformers. Water sources is from the outdoor fire pipe network which refes to volume of 30-B003701S-S0503.

2.2 水喷雾灭火系统应定期检查试验，发现问题及时解决，以免火灾时失去作用。

2.2 The water spray fire extinguishing system should check the test regularly to find out the problem in time so as to avoid to loss of the effect.

2.3 本册图中所有设备、材料选用的工作压力等级均要求为1.6MPa或以上。阀门等设置位置，应设置永久性固定标识。

2.3 The work pressure grade for all equipment and materials in this drawing is 1.6MPa or above. Permanent fixed signs should be set for the setting of the deluge valves and valves.

2.4 图中A、B坐标为厂区相对坐标，相对坐标的关系式见总图说明。标高单位以m计，尺寸单位以mm计。本图采用相对标高，地坪标高±0.00相当于EGM2008高程系统193.40m，管道标高均指管中心标高。

2.4 The coordinates A,B is a yard relative coordinates system, of which the conversion formula should see the instructions of the yard general layout drawing. The unit is mm. The elevation system of the drawings refers to EGM2008 elevation system, and the elevation of 0.00m in this drawing is equivalent to the absolute elevation of 193.6m. If there are no special notes, the elevation of the fire pipelines represent tube center.

2.5 本工程共4座雨淋阀箱：1YY雨淋阀箱供极1YY型换流变水喷雾灭火系统用水；1YD雨淋阀箱供极1YD型换流变水喷雾灭火系统用水；2YD雨淋阀箱供极2YD型换流变水喷雾灭火系统用水；2YY雨淋阀箱供极2YY型换流变水喷雾灭火系统用水。

2.5 There are 4 deluge valve boxes. The 1YY deluge valve box is for the the Pole 1 YY Type Converter Transformer; The 1YD deluge valve box is for the the Pole 1 YDY Type Converter Transformer; The 2YD deluge valve box is for the the Pole 2 YD Type Converter Transformer; The 2YY deluge valve box is for the the Pole 2 YY Type Converter Transformer.

3. 设备选型

3. Equipment Selection

3.1 本工程水喷雾系统中雨淋阀箱及雨淋阀组根据招投标结果由坚瑞永安安全系统工程有限公司负责供货安装，其雨淋阀采用新颖产品。系统中设备安装、维护等技术要求均由供货单位提供，并由其负责安装指导及调试开通。

3.1 According to the bid, the supply and installation of the deluge valve box are responsible by JianRui Yongan Safety Systems Engineering Co., Ltd. Suppliers are responsible for installation guidance and commissioning.

3.2 Y型过滤器的滤网应采用耐腐蚀金属材料，其网孔基本尺寸应为0.600mm~0.710mm。阀门及雨淋阀组等要求可见水喷雾灭火系统技术协议。

3.2 The filter screen of the Y filter should be corrosion-resistant metal, and its mesh size should be 0.600mm~0.710mm. The requirements for the Y type filters, normal valves and deluge valves refers to the technical agreements of the water spray system.

3.3 雨淋阀箱安装图见03图。

3.3 The drawing of the installation for the deluge valve box refers to 30-B003701S-S0504-003.

4 管道及阀门安装

4 Installation of pipes and valves

4.1 管道应进行水压试验，系统管网工作压力为1.00MPa，试验压力为1.50MPa。具体的水压试验要求详见相关施工验收规范。

4.1 The water pressure test should be carried out in the pipeline, the working pressure is 1.00MPa, and the test pressure is 1.60MPa. Specific test requirements are required to see the relevant construction acceptance criteria.

4.2 本册图中消防管道均采用内外热浸锌镀锌钢管。阀组下游DN50及以下管径的管道及阀门采用螺纹连接；DN50管径以上的管道及阀门采用刚性沟槽（卡箍）或法兰连接。如采用法兰连接，必须二次镀锌。材料表中暂按沟槽连接开列，连接方式如有变更，请施工单位自行调整。沟槽连接件应取得国家CCCF认证方能使用。连接方式应满足GB50974-2014中12.3施工章节第12.3.11及12.3.12条的相关规定。

4.2 Both internal and external hot-dip galvanized steel pipes are used in the fire-fighting pipes of this volume. The pipes and the valves of which diameter are less than or equal to 50mm are connected by screwed joint. The pipes and the valves of which diameter are greater than 50mm are connected by rigid grooves (clamps) or flange connections. The material bills are arranged according to the clamp connection mode.If the flange connection is used, it must be galvanized two times.The selected rigid grooves should also have 3C authentication. The connection mode shall meet the relevant provisions of GB50974-2014:12.3.11 and 12.3.12.

4.3 厂区消防管网至雨淋阀间的埋地管道连接方式、敷设要求及交叉避让原则详见本工程S0503卷册。

4.3 The connection type, laying requirements and principles for crossing of the pipe from fire pipe network to the deluge valve box refer to 30-B003701S-S0503.

4.4 安装施工中必须严格遵循《水喷雾灭火系统技术规范》（GB50219-2014）。在安装管道前要检查每一根管道，防止任何杂物进入系统管网，在安装喷头前，还必须对报警控制阀后管道清洗干净，确保无杂物堵塞喷头影响系统正常工作。

4.4 Check every pipe before installing the pipe and prevent any sundries from entering the system. Before installing the spray sprinkler, it must be cleaned and cleaned after the alarm control valve, making sure that the no-clutter blocking nozzle affects the normal operation of the system.

4.5 本册图中所有消防钢管安装时均须进行防腐并涂公安红面漆处理。水喷雾管道加涂色环。具体防腐涂料涂装方案见本工程S0502卷册。钢管安装时，应注意防止损坏镀锌和防腐层。

4.5 All steel pipes installed in this volume shall be protected against corrosion. Please refer to 30-B003701S-S0502.

4.6 管道穿楼板、墙壁应安装套管,套管高出楼层地坪5-10cm,管道与套管间的空隙用防火材料封堵并做好防水。具体做法可参照给水排水标准图集S4。

4.6 Wall-through bushing must be used when the pipe through the floor or wall, and the top of bushing is 50~100mm higher than ground elevation. Interspace between the pipe and bushing is blocked up employing flexible noncombustible material. Please refer to SCDWSD: S4.

4.7 当管道穿过防火墙时，管道与防火墙之间的缝隙应采用防火材料堵塞。当直径大于等于32mm的管道穿过防火墙时，除填塞防火材料外，还应采取阻火措施。措施包括采用阻火圈或阻火带并辅以如防火泥或防火密封胶的有机堵料等封堵。

4.7 When the pipeline passes through the firewall, the gap between the pipe and the firewall should be blocked by fire retardant materials. When the diameter of the pipeline is greater than or equal to 32mm through the firewall, in addition to filling fire materials, but also should take measures to prevent fire.

4.8 所有管道和喷嘴都能够通过最低层的喷嘴以及干管上的放空阀放空，变压器油坑处消防干管均以i=0.004坡向管沟，管沟内干管均以i=0.004坡向放空阀，管沟内排水通过结构留孔汇至电缆沟集水坑内，由电缆沟集中后统一排出。每次水喷雾后均应进行放空。

4.8 All pipe and the nozzle will be able to draining through the lowest layer of emptying the nozzle or the vent valve, pipe grade I should be higher than or equal to 0.004.

4.9 系统中的管道、喷头及支架等均应接地。具体图纸及接地电阻等详见电气专业图纸。

4.9 The system is required to be earthing.

4.10 雨淋阀箱内的试验用排水可通过临时措施排至雨水下水道。

4.10 The water of the deluge valve while testing will be drained into the rainfall piping system by stopgap measure.

4.11 为便于设备检修能撤离,本系统中的管道均设有法兰连接或刚性沟槽卡箍,可以拆卸。装喷头处的管道螺纹必须按照到货的水喷头实际尺寸进行加工。

4.11 In order to facilitate the evacuation of the equipment, the pipes in the system have rigid grooves, which can be disassembled. Pipe threads must be processed according to the actual size of the spray sprinkler.

4.12 系统在管网安装完毕后，应对其进行强度试验、冲洗和严密性试验。具体试验冲洗要求详见《消防给水及消火栓系统技术规范》GB50974-2014第12.4节。

4.12 Specific test requirements are required to see the relevant construction acceptance criteria.

4.13 本卷册所有消防水管DN250穿越管沟处壁处，应预埋D325×8刚性防水套管A型，详见《给水排水标准图集》02S404页17。

4.13 All the position which pipe through the trench should be embedded D325×8 A-type rigid waterproofing casing.

5支吊架安装

5 Suspension and support

5.11 管道所需支架安装及间距详见《给水排水标准图集》03S402,也可根据实地作具体安装,但要求牢固可靠。所有管道支吊架均应进行防腐处理，具体处理方法见图集或同管道，如焊接破坏镀锌处须补涂锌加涂料。管沟内支架详见03图。

5.11 The installation and spacing of other pipe support can refer to SCDWSD: 03S402, can also according to the field for a specific arrangement, but the demand is firm and reliable.

5.12 报警阀组及闸阀下应设置支架，详见给水排水标准图集03S402页91。

5.12 Set the support for alarm valve and gate valve. Please refer to SCDWSD: 03S402 page(91).

6 系统控制

6 System control

6.1 在雨淋阀本体上设有紧急机械启动装置,并应采取安全保护措施,由专人负责,以免发生误操作,造成不必要的损失。

6.1 Emergency operation will be provided.

6.2 水喷雾灭火系统的控制要求详见本工程S0505卷册。

6.2 The requirements of the water spray system refers to 30-B003701S-S0505.

图例：

Note:

	消防管道	PIPE
	法兰片	FLANGE
	Y型过滤器	FILTER
	信号蝶阀	SIGNAL BUTTERFLY VALVE
	蝶阀	BUTTERFLY VALVE
	闸阀	GATE VALVE
	雨淋阀	DELUGE VALVE

Reference Drawings

Drwg. No.	Title

Revisions

	Name	Date	Notes

巴基斯坦默蒂亚里-拉合尔±660kV直流输电工程

±660kV HVDC Project from Matiari to Lahore in Pakistan

NATIONAL TRANSMISSION & DESPATCH COMPANY (NTDC) LIMITED PAKISTAN

CONTRACTOR 国家电网 STATE GRID 中国电力技术装备有限公司 CHINA ELECTRIC POWER TECHNOLOGY EQUIPMENT CO.,LTD.

SUBCONTRACTOR East China Electric Power Design Institute Co.,Ltd.

拉合尔±660kV换流站

±660kV Lahore Converter Station

设计阶段 PHASE：施工图 Detail Design

M L H V D C - L C S - E C I - D D - W F - 0 5 0 4 - 0 0 1 A

	姓名 Name	日期 Date
设计 Designed	金新锐	2019.5.13
校核 Checked	吴湧	2019.5.13
审核 Reviewed	李斌	2019.5.13
批准 Approved	王仙亮	2019.5.13

换流变雨淋阀组安装图施工说明

Construction Introduction of Deluge Valve Box for Converter Transformers

比例 Scale：NTS

图号 DWG NO.：30-B003701S-S0504-001

版本 REV.：A

A1(841x594)

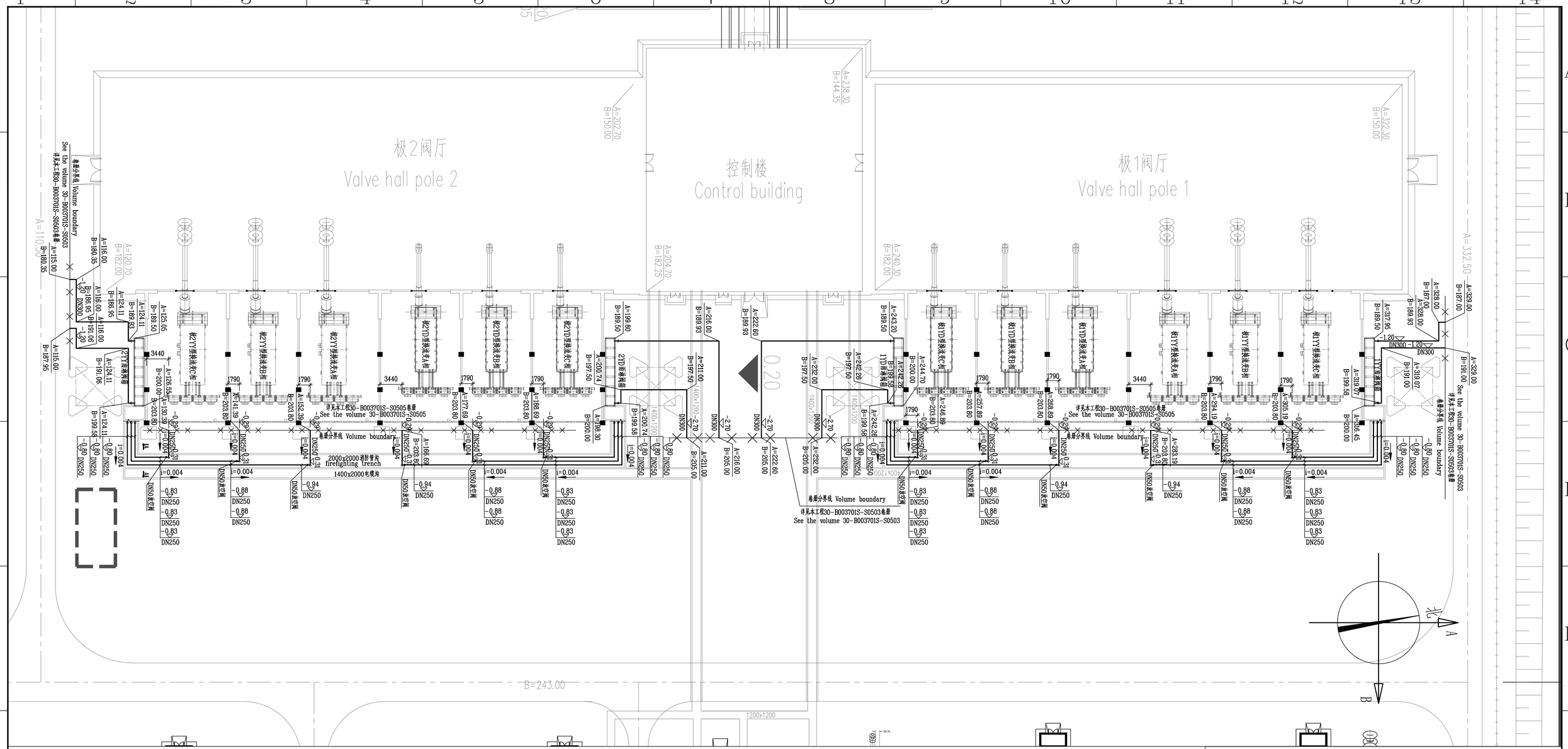

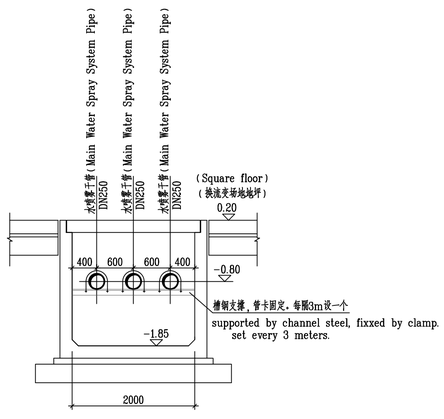

A-A剖面图

A-A Sectional View

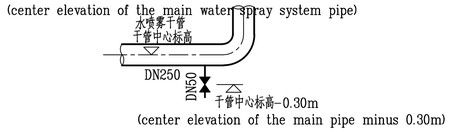

水喷雾干管放空阀安装示意图

Drawing of the vent valve for the mainwater spray system pipe

Reference Drawings

Drwg. No.	Title

Revisions

	Name	Date	Notes

巴基斯坦默蒂亚里-拉合尔±660kV直流输电工程

±660kV HVDC Project from Matiari to Lahore in Pakistan

NATIONAL TRANSMISSION & DESPATCH COMPANY (NTDC) LIMITED PAKISTAN

CONTRACTOR 国家电网 STATE GRID 中国电力技术装备有限公司 CHINA ELECTRIC POWER EQUIPMENT & TECHNOLOGY CO.,LTD.

SUBCONTRACTOR East China Electric Power Design Institute Co.,Ltd.

拉合尔±660kV换流站

±660kV Lahore Converter Station

设计阶段 PHASE: 施工图 Detail Design

M L H V D C - L C S - E C I - D D - W F - 0 5 0 4 - 0 0 2 A

	姓名 Name	日期 Date
设计 Designed	金解锐	2019.5.13
校核 Checked	吴湧	2019.5.13
审核 Reviewed	李斌	2019.5.13
批准 Approved	杨世恩	2019.5.13

站区水喷雾干管平面布置图

Layout Plan of Main Water Spray System Pipe for Converter Transformers

比例 Scale: NTS

图号 DWG NO.: 30-B003701S-S0504-002

版本 REV.: A

594X841

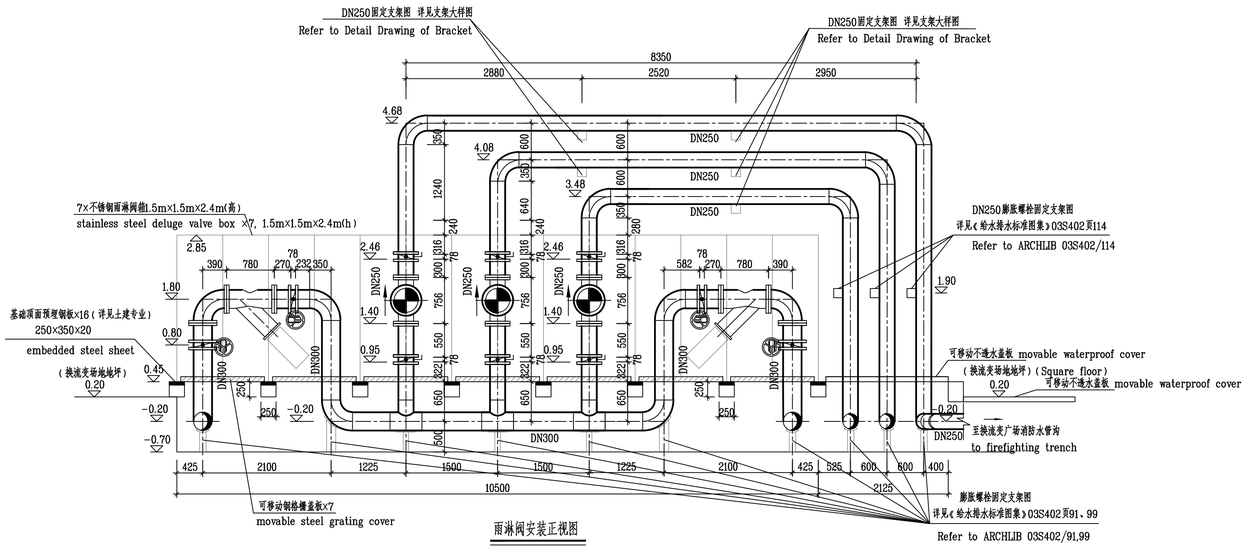

雨淋阀安装正视图

Elevation View of the Deluge Valve Box

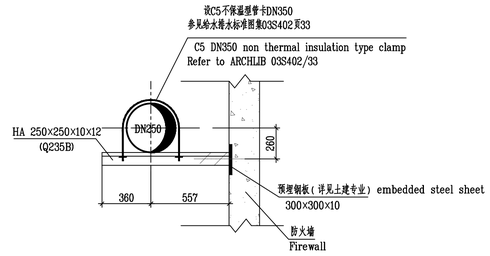

支架大样图

Detail Drawing of Bracket

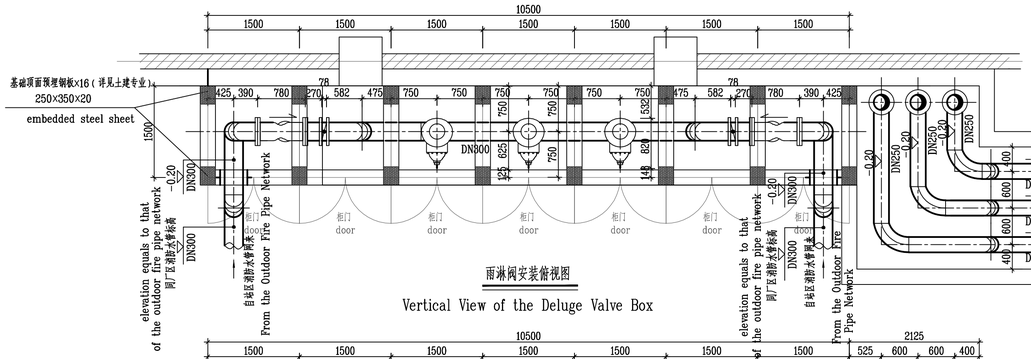

雨淋阀安装俯视图

Vertical View of the Deluge Valve Box

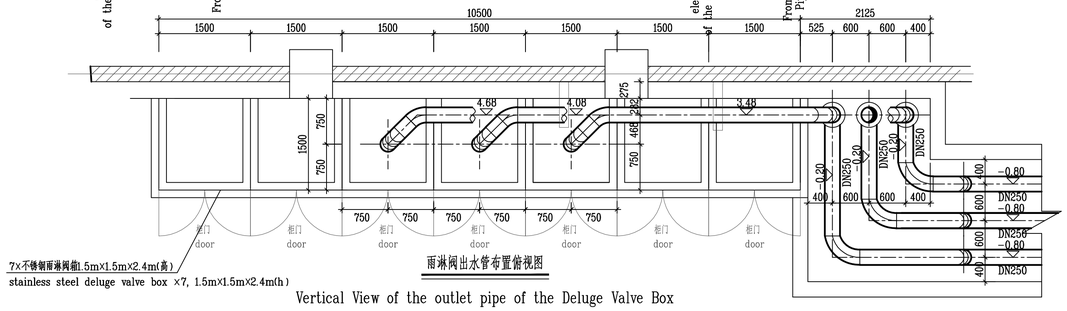

雨淋阀出水管布置俯视图

Vertical View of the outlet pipe of the Deluge Valve Box

说明:

Notes:

1. 图中A、B坐标为厂区相对坐标，相对坐标的关系式见总图说明。标高单位以m计，尺寸单位以mm计。本图采用相对标高，地坪标高±0.00相当于EGM2008高程系统193.40m，管道标高均指管中心标高。
1. The coordinates A,B is a yard relative coordinates system, of which the conversion formula should see the instructions of the yard general layout drawing. The elevation unit is m, and the size unit is mm.
2. 本图中雨淋阀箱以1YD雨淋阀箱、2YY雨淋阀箱为例，1YY雨淋阀箱、2YD雨淋阀箱与本图中雨淋阀箱为上下镜像关系。
2. The drawing of the deluge valve box is based on 1YD and 2YY deluge valve boxes.The 1YY and 2YD deluge valve boxes are mirror symmetrical.
3. 雨淋阀箱内的试验用排水可通过临时排施排至雨水下水道。
3. The water of the deluge valve while testing will be drained into the rainfall piping system by stopgap measure.
4. 其他说明详见本卷册01图。
4. Other notes refer to 30-B003701S-S0504-001.

Reference Drawings

Drwg. No.	Title

Revisions

	Name	Date	Notes

巴基斯坦默蒂亚里—拉合尔±660kV直流输电工程

±660kV HVDC Project from Matiari to Lahore in Pakistan

NATIONAL TRANSMISSION & DESPATCH COMPANY (NTDC) LIMITED PAKISTAN

CONTRACTOR 国家电网 STATE GRID 中国电力技术装备有限公司 CHINA ELECTRIC POWER EQUIPMENT AND TECHNOLOGY CO.,LTD.

SUBCONTRACTOR East China Electric Power Design Institute Co.,Ltd.

拉合尔±660kV换流站

±660kV Lahore Converter Station

设计阶段 PHASE: 施工图 Detail Design

M L H V D C - L C S - E C I - D D - W F - 0 5 0 4 - 0 0 3 A

	姓名 Name	日期 Date
设计 Designed	金科锐	2019.5.13
校核 Checked	吴湧	2019.5.13
审核 Reviewed	李波	2019.5.13
批准 Approved	[illegible]	2019.5.13

雨淋阀组平、剖面图

Plan and Section Drawing of Deluge Valve Box

比例 Scale: 1:50

图号 DWG NO.: 30-B003701S-S0504-003

版本 REV.: A

594X841

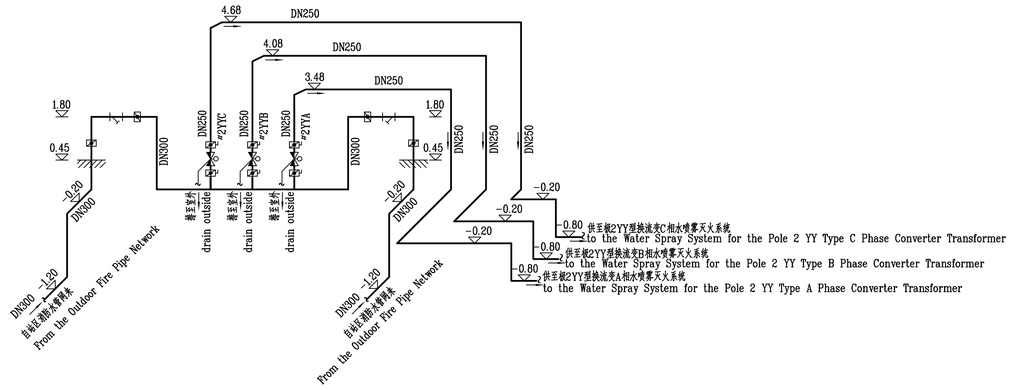

2YY雨淋阀箱雨淋阀组管道透视图

Perspective View of the 2YY Deluge Valve Box

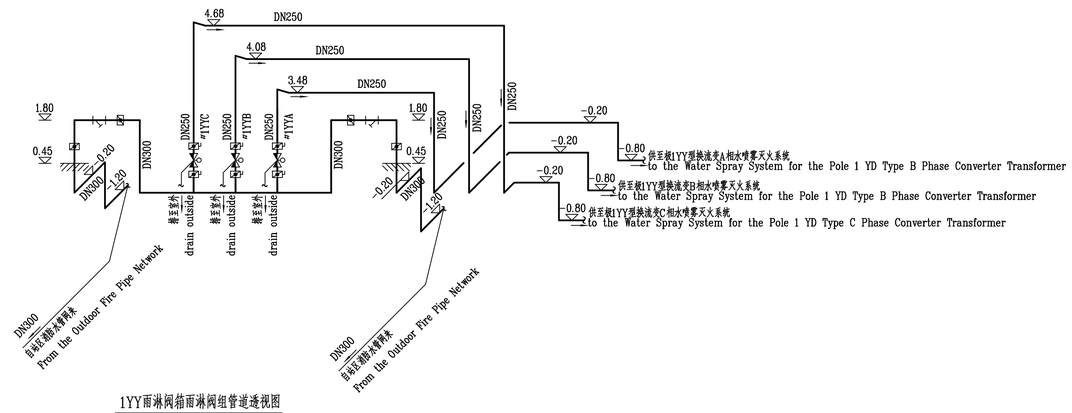

1YY雨淋阀箱雨淋阀组管道透视图

Perspective View of the 2YD Deluge Valve Box

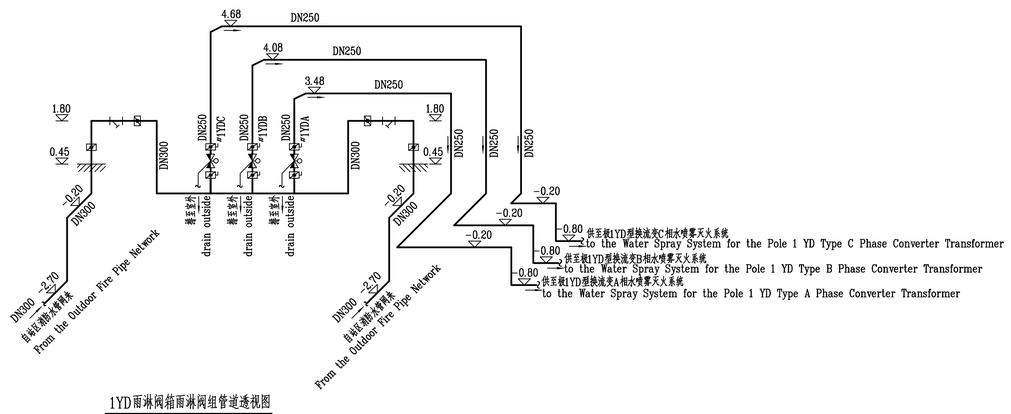

1YD雨淋阀箱雨淋阀组管道透视图

Perspective View of the 1YD Deluge Valve Box

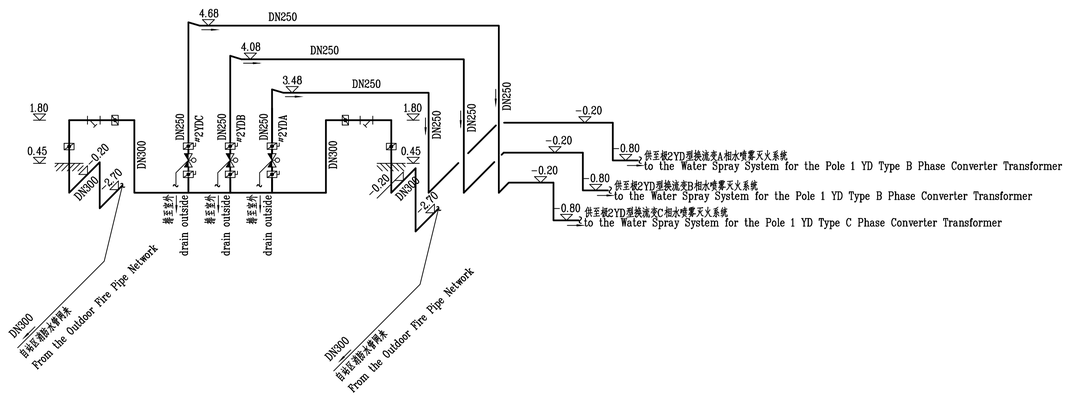

2YD雨淋阀箱雨淋阀组管道透视图

Perspective View of the 2YD Deluge Valve Box

说明:

Notes:

1. 图中A、B坐标为厂区相对坐标，相对坐标的关系式见总图说明。标高单位以m计，尺寸单位以mm计。本图采用相对标高，地坪标高±0.00相当于EGM2008高程系统193.40m，管道标高均指管中心标高。
1. The coordinates A,B is a yard relative coordinates system, of which the conversion formula should see the instructions of the yard general layout drawing. The elevation unit is m, and the size unit is mm.
2. 其他说明详见本卷册01图。
2. Other notes refer to 30-B003701S-S0504-001.

Reference Drawings

Drwg. No.	Title

Revisions

	Name	Date	Notes

巴基斯坦默蒂亚里-拉合尔±660kV直流输电工程

±660kV HVDC Project from Matiari to Lahore in Pakistan

NATIONAL TRANSMISSION & DESPATCH COMPANY (NTDC) LIMITED PAKISTAN

CONTRACTOR 国家电网 STATE GRID 中国电力技术装备有限公司 CHINA ELECTRIC POWER EQUIPMENT AND TECHNOLOGY CO.,LTD.

SUBCONTRACTOR East China Electric Power Design Institute Co.,Ltd.

拉合尔±660kV换流站

±660kV Lahore Converter Station

设计阶段 PHASE: 施工图 Detail Design

M L H V D C - L C S - E C I - D D - W F - 0 5 0 4 - 0 0 4 A

	姓名 Name	日期 Date
设计 Designed	金新锐	2019.5.13
校核 Checked	吴润	2019.5.13
审核 Reviewed	郑成	2019.5.13
批准 Approved	王文强	2019.5.13

雨淋阀组管道透视图

Perspective Drawing of the Pipe of Deluge Valve Box

比例 Scale: NTS

图号 DWG NO.: 30-B003701S-S0504-004

版本 REV.: A

594X841

备注:
Notes:
1. 管道连接件(卡箍或法兰片)及其它管件不足部分或现场临时打弯管件计入管长。
1. The connection fitting(clamps or flanges), insufficient part or the temporary elbow fitting are included in length of pipes.

编号 No.	名称 Name	规格 Parameters	单位 Unit	数量 Quan	材料 Material	单重 Single 重量(公斤)	总重 Totoal Weight(Kg)	参考图号及备注 Remark
16	防腐油漆	实报实销						
	Anti-corrosive coating	Accountable						
15	管支架		套	24				详见003图支架大样图
	Bracket		Set					refer to B003701S-S0504-003
14	管支架		套	15				详见给排水标准图集03S402页114
	Bracket		Set					See to ARCHLIB 03S402/114
13	管支架		套	10				详见给排水标准图集03S402页99
	Bracket		Set					See to ARCHLIB 03S402/91
12	管支架		套	35				详见给排水标准图集03S402页91
	Bracket		Set					See to ARCHLIB 03S402/91
11	截止阀	DN50	套	12				用于放空
	Shut-off valve		Set					for venting
10	三通	DN250 PN=1.6MPa	只	15	球墨铸铁			含卡箍或法兰等连接配件
	three Tee		m		ductile iron			including connection fittings, such as clamps or flange etc.
9	45°弯头	DN250 PN=1.6MPa	只	15	球墨铸铁			含卡箍或法兰等连接配件
	45°elbow		m		ductile iron			including connection fittings, such as clamps or flange etc.
8	90°弯头	DN250 PN=1.6MPa	只	125	球墨铸铁			含卡箍或法兰等连接配件
	90°elbow		m		ductile iron			including connection fittings, such as clamps or flange etc.
7	90°弯头	DN300 PN=1.6MPa	只	90	球墨铸铁			含卡箍或法兰等连接配件
	90°elbow		m		ductile iron			including connection fittings, such as clamps or flange etc.
6	钢管(内外热镀锌)	D60.3×4(DN50),PN=1.6MPa	米	10				GB/T 3091-2015, 含卡箍或法兰等连接配件
	Steel pipe (inside and outside hot-dip galvanizing)		m					including connection fittings, such as clamps or flange etc.
5	钢管(内外热镀锌)	D273×6(DN250),PN=1.6MPa	米	650				GB/T 21835-2008, 含卡箍或法兰等连接配件
	Steel pipe (inside and outside hot-dip galvanizing)		m					including connection fittings, such as clamps or flange etc.
4	钢管(内外热镀锌)	D323.9×8(DN300),PN=1.6MPa	米	310				GB/T 21835-2008, 含卡箍或法兰等连接配件
	Steel pipe (inside and outside hot-dip galvanizing)		m					including connection fittings, such as clamps or flange etc.
3	蝶阀	DN300,PN=1.6MPa	只	16				含卡箍或法兰等连接配件
	butterfly valve							including connection fittings, such as clamps or flange etc.
2	Y型过滤器	DN300,PN=1.6MPa	套	8				含卡箍或法兰等连接配件
	Y type filter		set					including connection fittings, such as clamps or flange etc.
1	雨淋阀箱		组	4				由型雨水安安全系统工程有限公司负责供货安装，包括雨淋报警阀组、前后信号蝶阀、雨淋阀箱等，详见技术协议
	Deluge Valve Box		Set					including deluge valve, butterfly valve etc. refer to the technical agreements

Reference Drawings

Drwg. No.	Title

Revisions

	Name	Date	Notes

巴基斯坦默蒂亚里-拉合尔±660kV直流输电工程
±660kV HVDC Project from Matiari to Lahore in Pakistan

NATIONAL TRANSMISSION & DESPATCH COMPANY (NTDC) LIMITED PAKISTAN

CONTRACTOR 国家电网 STATE GRID 中国电力技术装备有限公司 CHINA ELECTRIC POWER EQUIPMENT AND TECHNOLOGY CO.,LTD.

SUBCONTRACTOR East China Electric Power Design Institute Co.,Ltd.

拉合尔±660kV换流站
±660kV Lahore Converter Station

设计阶段 PHASE: 施工图 Detail Design

M L H V D C - L C S - E C I - D D - W F - 0 5 0 4 - 0 0 5 A

	姓名 Name	日期 Date
设计 Designed	金新能	2019.5.13
校核 Checked	吴湧	2019.5.13
审核 Reviewed	李成	2019.5.13
批准 Approved	杨晓亮	2019.5.13

雨淋阀组及水喷雾干管材料表
Material List of the Deluge Valve Box and Main Pipe of Water Spray System for Converter Transformer

比例 Scale: NTS
图号 DWG NO.: 30-B003701S-S0504-005
版本 REV.: A

A2(594x420)